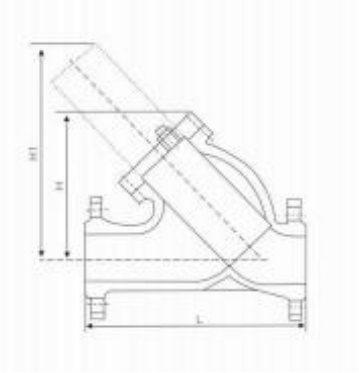SY4P-G41H flange filter